FOR-1754 Rev.1.1

未注公差/General tolerances(mm)														
0 ~ 3	>3 ~ 6	>6 ~ 10	>10 ~ 18	>18 ~ 30	>30 ~ 50	>50 ~ 80	>80 ~ 120	>120 ~ 180	>180 ~ 250	>250 ~ 315	>315 ~ 400	>400 ~ 500	>500	0.1/10
±0.12	±0.18	±0.22	±0.26	±0.31	±0.37	±0.57	±0.80	±0.93	±1.05	±1.15	±1.60	±2.20	±2.50	±2°

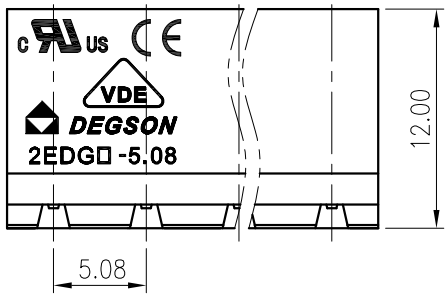

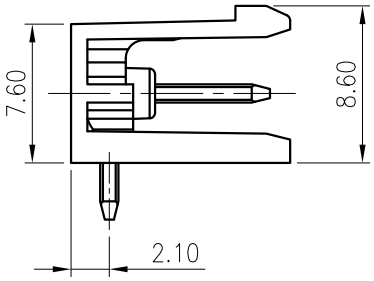

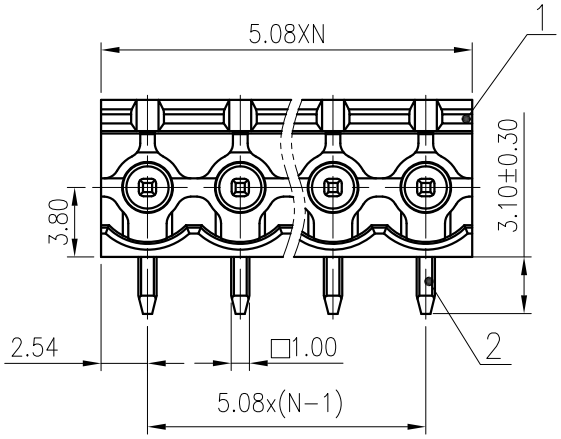

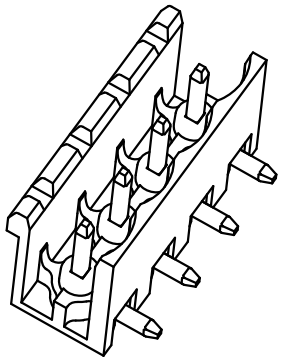

ITEM	NAME OF PART	MATERIAL	NOTES
2	Pin	Copper	Sn Plated
1	Housing	PA66	UL94V-0

	B	C	D
UL 标准/UL Standard:			
额定电压/电流/Rated Voltage(V)/Current(A)	300/15	/	300/10
EC 标准/IEC Standard:			
过压类别/Overvoltage Category/污染等级/Pollution Degree	III/3	III/2	II/2
额定电压/电流/Rated Voltage(V)/Current(A)	/	320/20	/
额定脉冲电压(KV)/Rate Impulse Voltage(KV)	/	4	/
间距/Pitch(mm)/线数范围/Poles	5.08/N=02~24P		
使用温度范围/Operating temperature(°C)	-40~+105		
符合RoHS环保要求/Conform to RoHS	Yes		

PCB LAYOUT

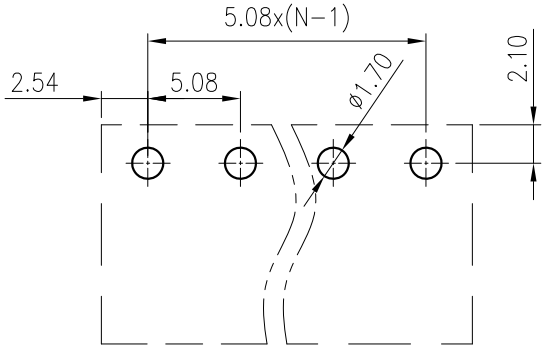

MATERIAL: /	SURFACE: /
MAT NO.: /	DEGSON® 宁波高松电子有限公司 NINGBO DEGSON ELECTRICAL CO., LTD
STATUS: /	
APPD: LanChH 2020.05.13	NAME: 2EDGR-5.08-XXP-1Y-100A(H)
CHKD: GongYZh 2020.05.13	
DRFT: LiY 2020.05.13	DRAWING NO.: 10001949 REV T0
SIZE: A4 mm (inch)	TYPE: CUSTOMER DRAWING SCALE: 2.5:1 SHEET 1/1

REV	ECN	DESCRIPTION	DRFT	DATE